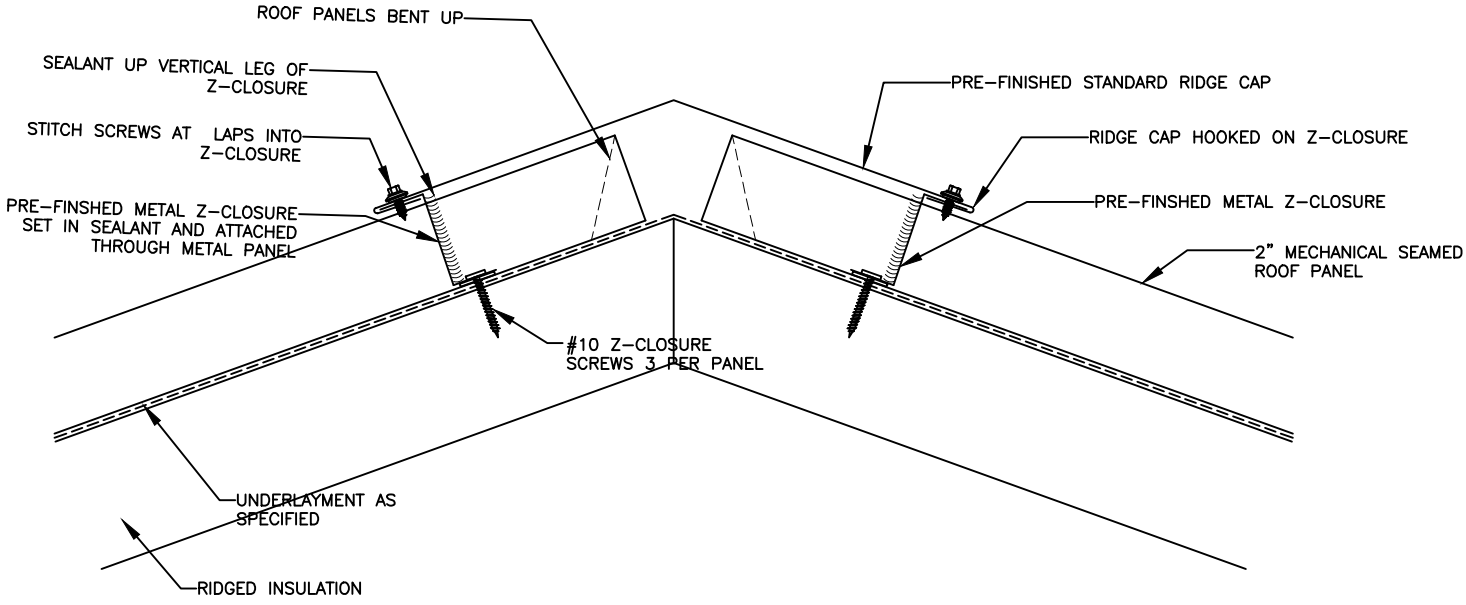

UNEEKE™ MANUFACTURING

RIDGE / HIP DETAIL

1

METAL ROOF DETAILS

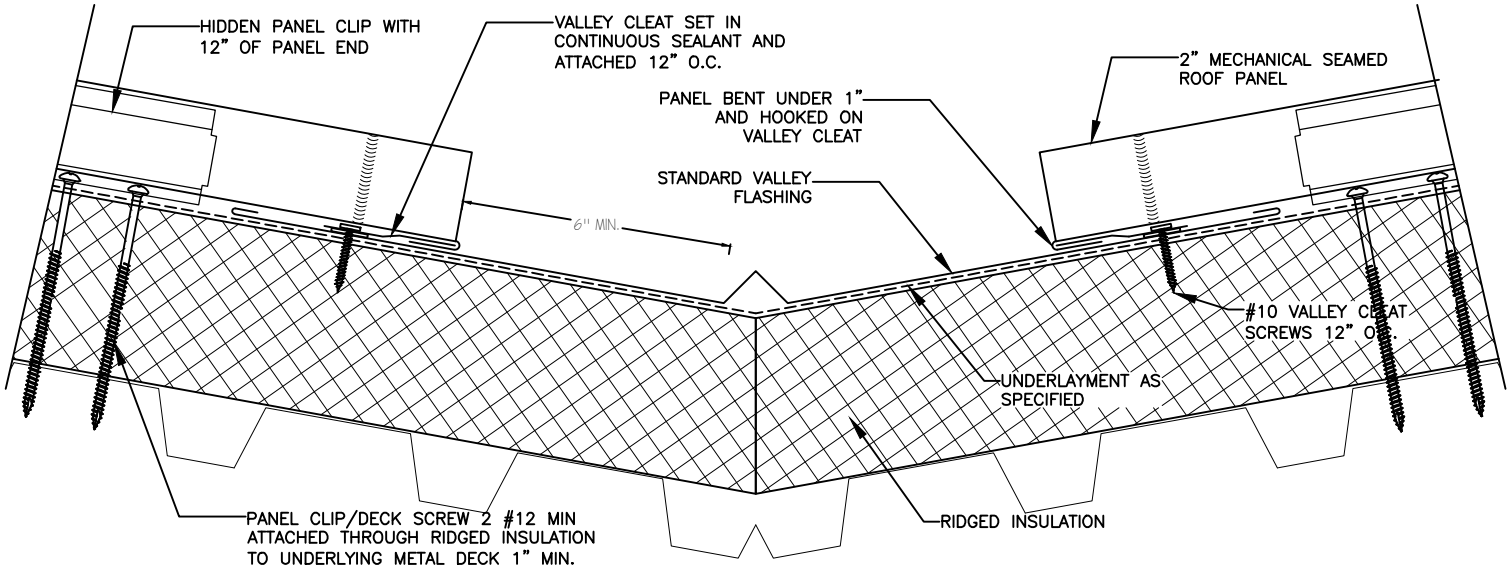

UNEEKE™ MANUFACTURING

VALLEY DETAIL

2

METAL ROOF DETAILS

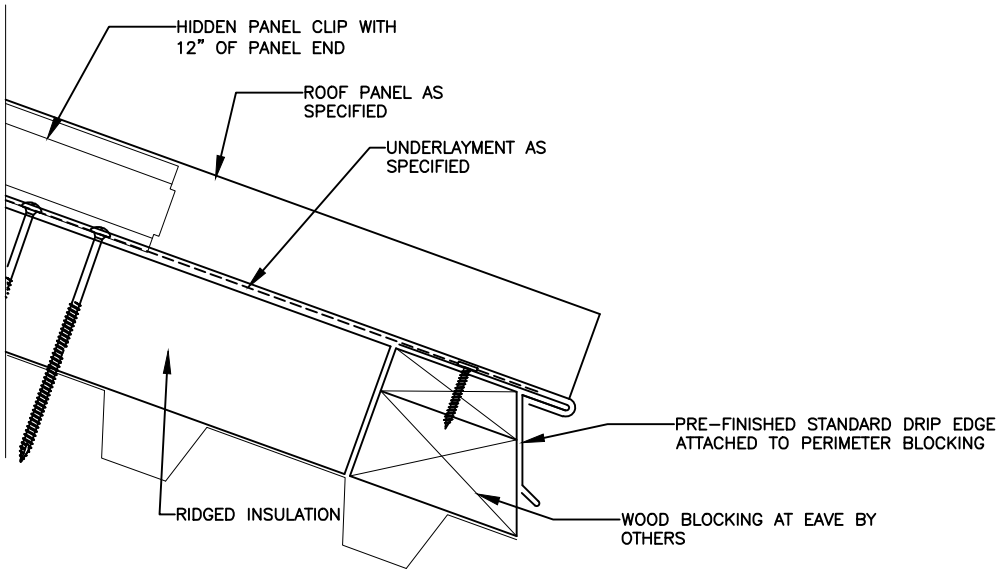

UNEEKE™ MANUFACTURING

EAVE DETAIL

3

METAL ROOF DETAILS

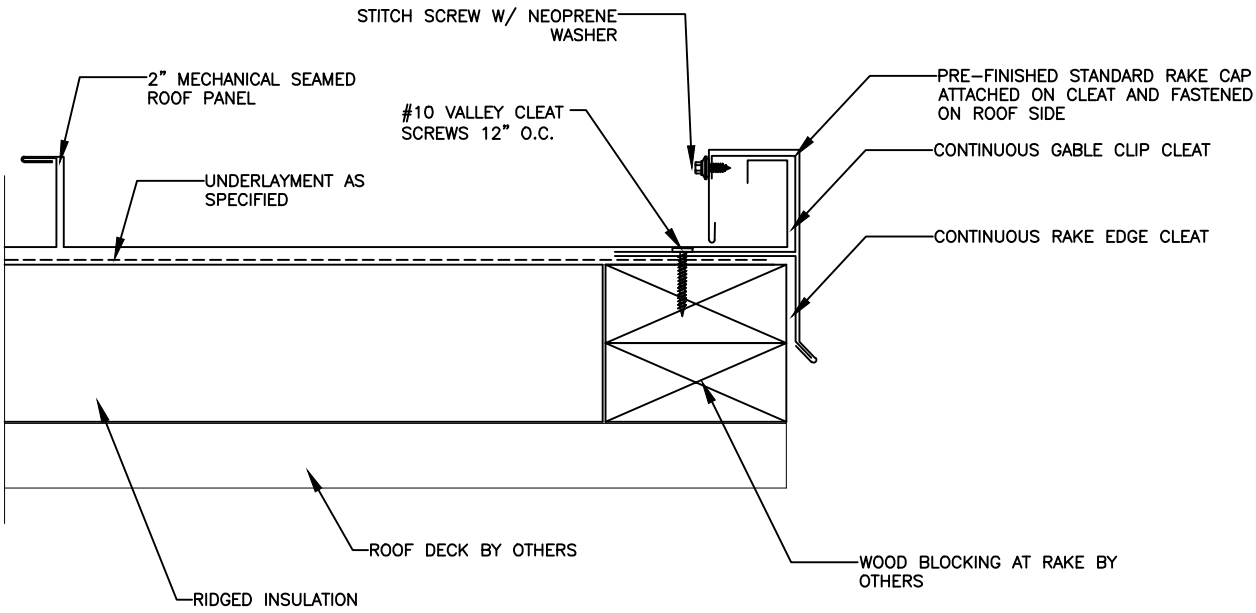

UNEEKE™ MANUFACTURING

RAKE DETAIL

4

METAL ROOF DETAILS

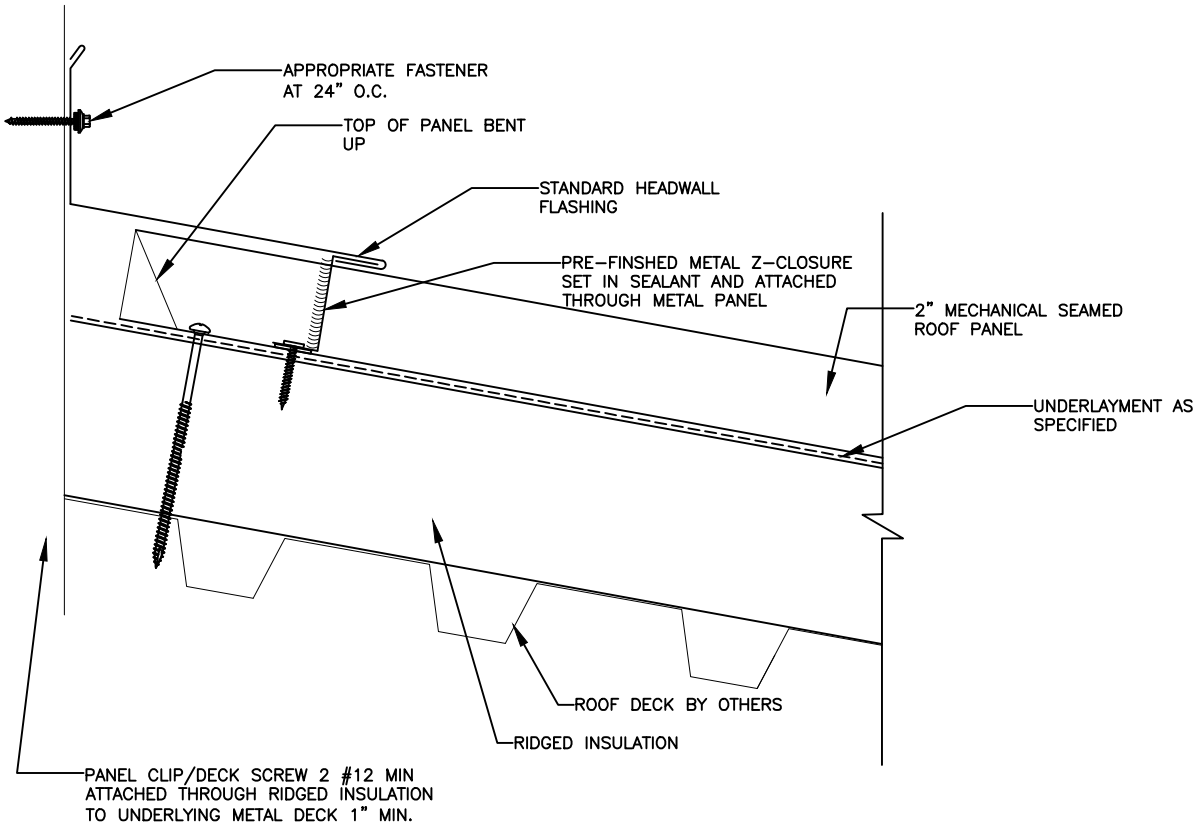

UNEEKE™ MANUFACTURING

HEADWALL DETAIL

5

METAL ROOF DETAILS

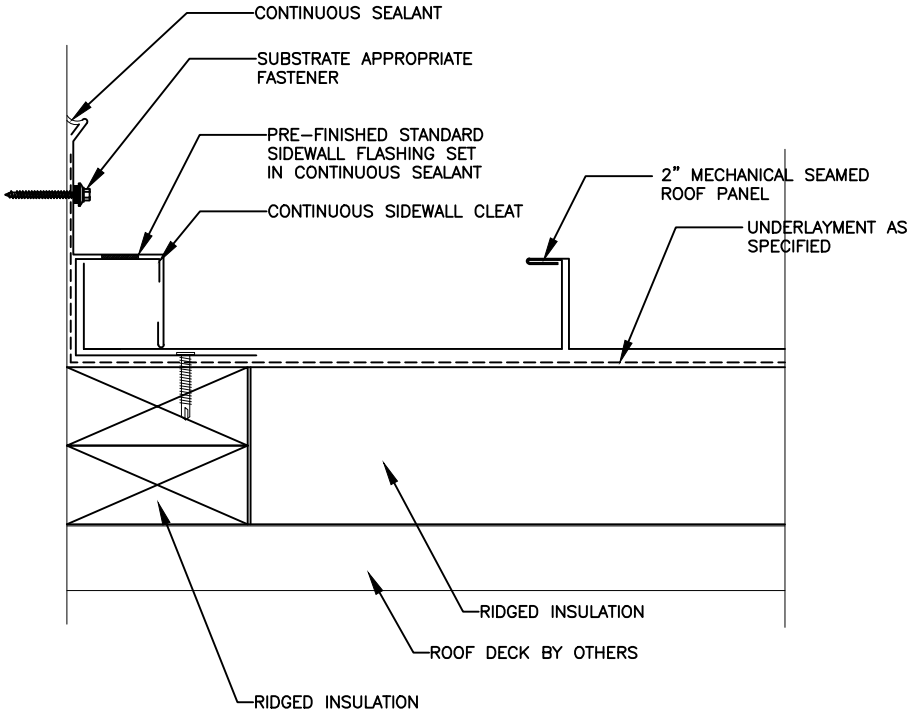

UNEEKE™ MANUFACTURING

SIDEWALL DETAIL

6

METAL ROOF DETAILS